MODEL
ODYSSEY: OE35W, OE45W

WIRING DIAGRAM

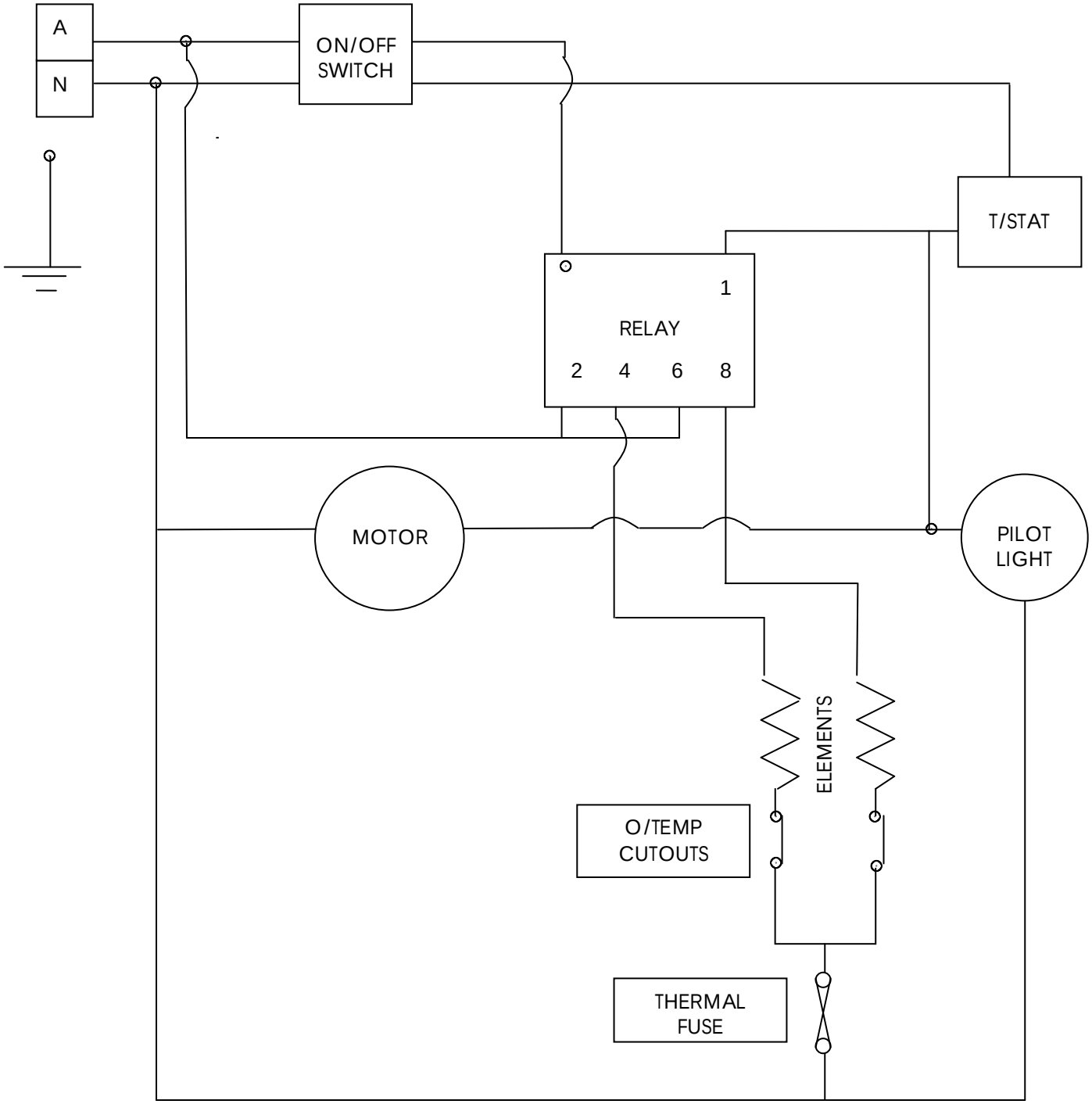

PUREHEAT
D R Distribution Pty Ltd
Unit 9 No 3 Lancaster St Ingleburn NSW 2565
Ph 02 9618 3842
www.drdistribution.com.au